BUFFER MODUL, 24 V DC

UF20.241
Buffer Module 24V dc I/P 24V dc 20A O/P



- Ideiglenes áramszünetet jól kezeli
- 20 A/24 V DC kezelése 200 ms ideig
- Állapot kimenetek
- Karbantartástól mentes
- 3 év garancia

TERMÉKLEÍRÁS

MŰSZAKI ADATOK

Charging The Battery Type	0,6 A
Efficiency	99 %
Élettartam	166 000 h @ 40 °C, stand-by mode
Input Current During Charging Of Aggregates	0,6 A
Input Voltage From The Unit	24 V DC
IP-osztály	IP20
Jóváhagyások	CB, CE, CSA, CSA US, UL
Magasság	124 mm
Mélység	102 mm
MTBF (IEC 61709)	2 327 000 h @ 40 °C, stand-by mode
Output current at 24 V dc	20 A
Output Current During Normal Operation Via The Unit Max	20 A
Output Current In Buffer Mode Max	20 A
Output Voltage At Buffering	22,5 V DC
Output Voltage Normal Operation	24 V DC

Ripple. max	200 mV pp
Szélesség	64 mm
Temperature Range Without Derating From	-25 °C
Temperature Range Without Derating To	70 °C
Tömeg	0,74 kg
Védőanyag	Alumínium
Voltage Level Of Activation Of The Buffer Module	22,5 V DC

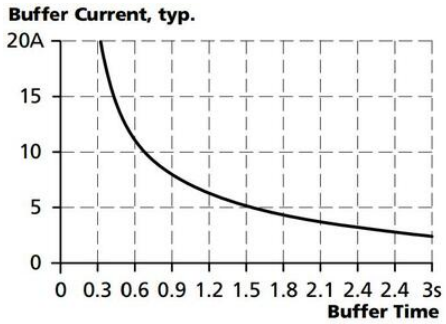

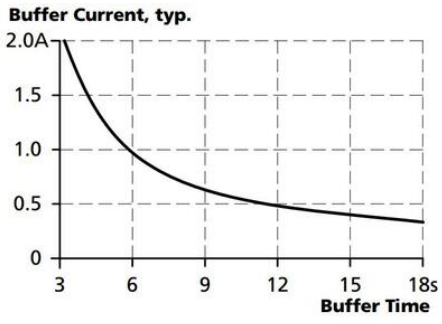

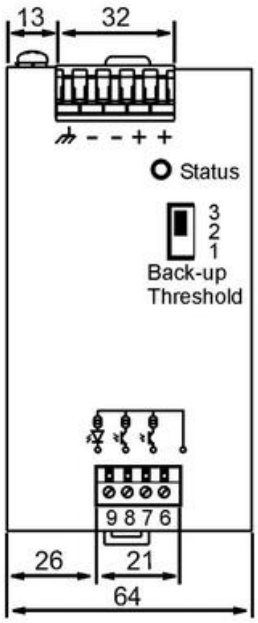

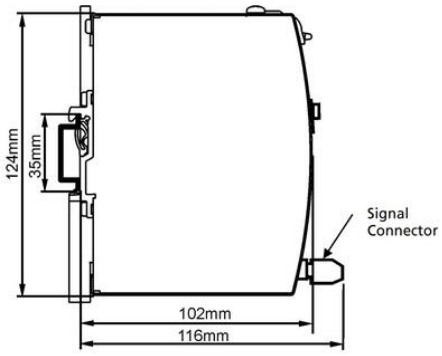

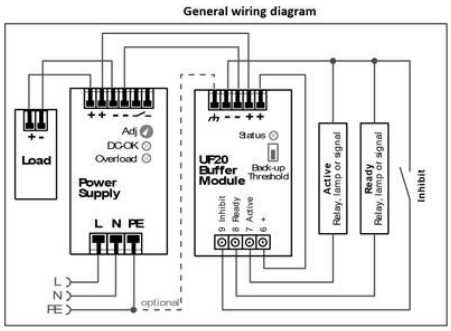

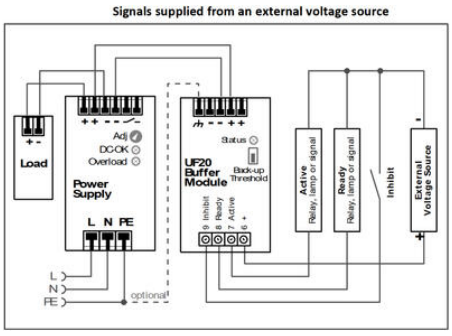

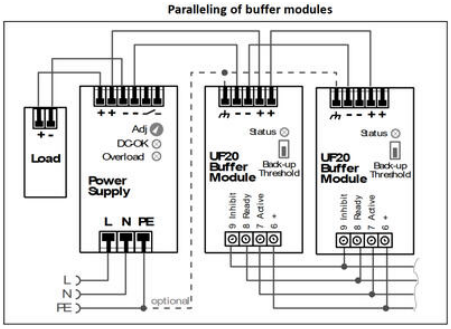

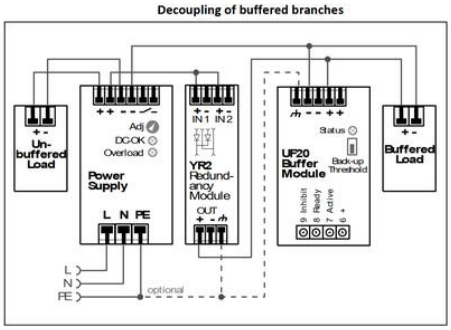

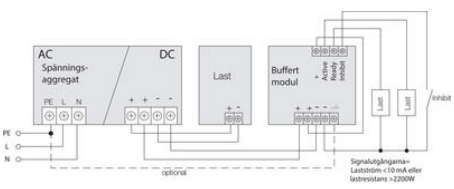

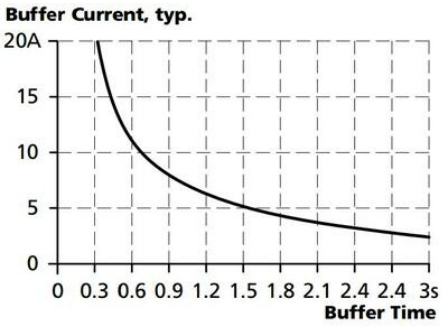
Buffer Current, typ.
20A
15
10
5
0
0 0.3 0.6 0.9 1.2 1.5 1.8 2.1 2.4 2.4 3s
Buffer Time

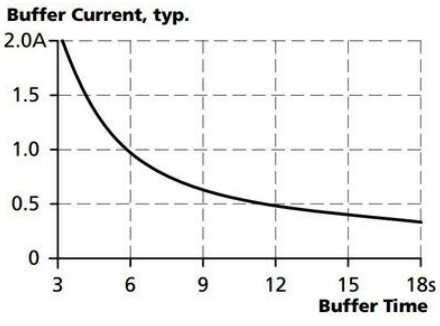
Buffer Current, typ.
2.0A
1.5
1.0
0.5
0
3 6 9 12 15 18s
Buffer Time

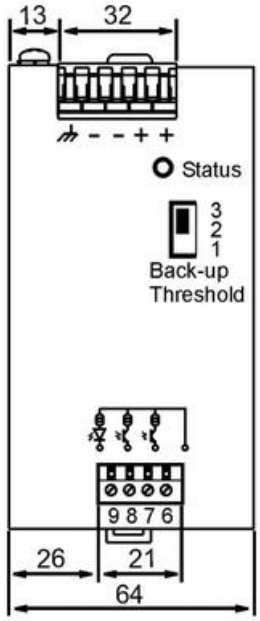
13
32
Status
3
2
1
Back-up
Threshold
9 8 7 6
26
21
64

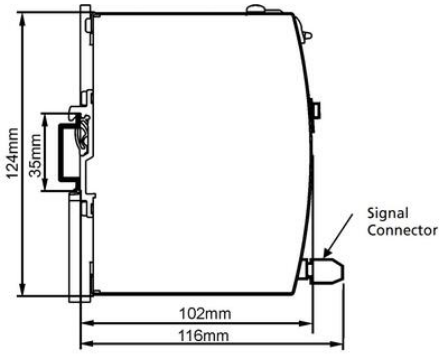
124mm
35mm
Signal
Connector
102mm
116mm

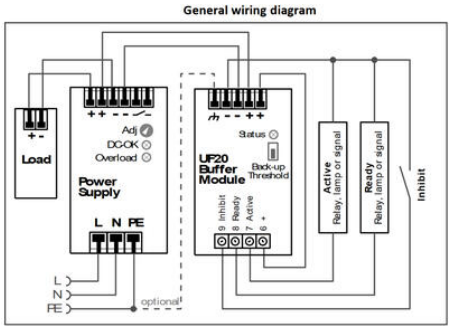
General wiring diagram
Load
Power
Supply
L N PE
Adj
DC-OK
Overload
Status
UF20
Buffer
Module
Back-up
Threshold
9 Inhibit
8 Ready
7 Active
6 +
Active
Relay, lamp or signal
Ready
Relay, lamp or signal
Inhibit
L
N
PE
optional

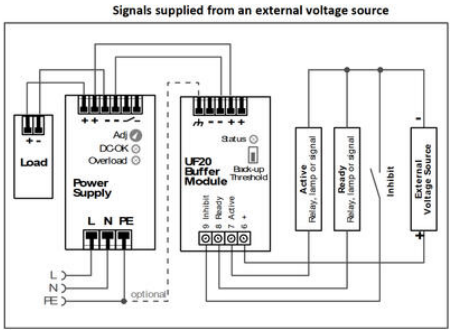
Signals supplied from an external voltage source
Load
Power
Supply
L N PE
Adj
DC-OK
Overload
Status
UF20
Buffer
Module
Back-up
Threshold
9 Inhibit
8 Ready
7 Active
6 +
Active
Relay, lamp or signal
Ready
Relay, lamp or signal
Inhibit
External
Voltage Source
L
N
PE
optional

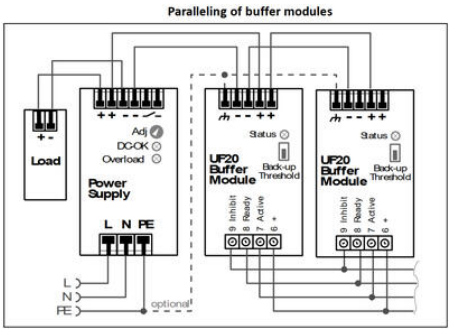
Paralleling of buffer modules
Load
Power
Supply
L N PE
Adj
DC-OK
Overload
Status
UF20
Buffer
Module
Back-up
Threshold
9 Inhibit
8 Ready
7 Active
6 +
L
N
PE
optional

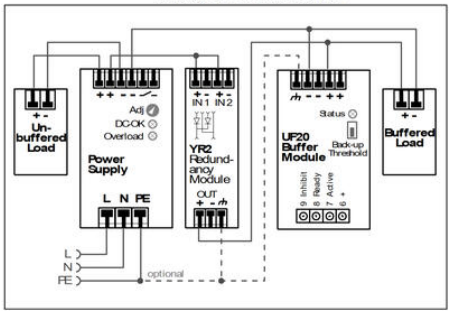
Decoupling of buffered branches
Un-
buffered
Load
Power
Supply
L N PE
Adj
DC-OK
Overload
YR2
Redund-
ancy
Module
IN1 IN2
OUT
Status
UF20
Buffer
Module
Back-up
Threshold
9 Inhibit
8 Ready
7 Active
6 +
Buffered
Load
L
N
PE
optional

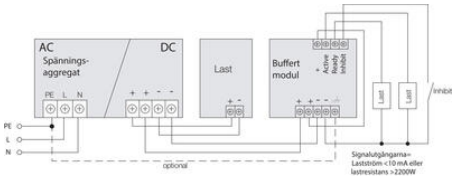
AC
Spännings-
aggregat
DC
Last
Buffert
modul
PE L N
Active
Ready
Inhibit
Last
Last
Inhibit
PE
L
N
optional
Signalutgångarna=
Laststöm <10 mA eller
lastresistans >2200W